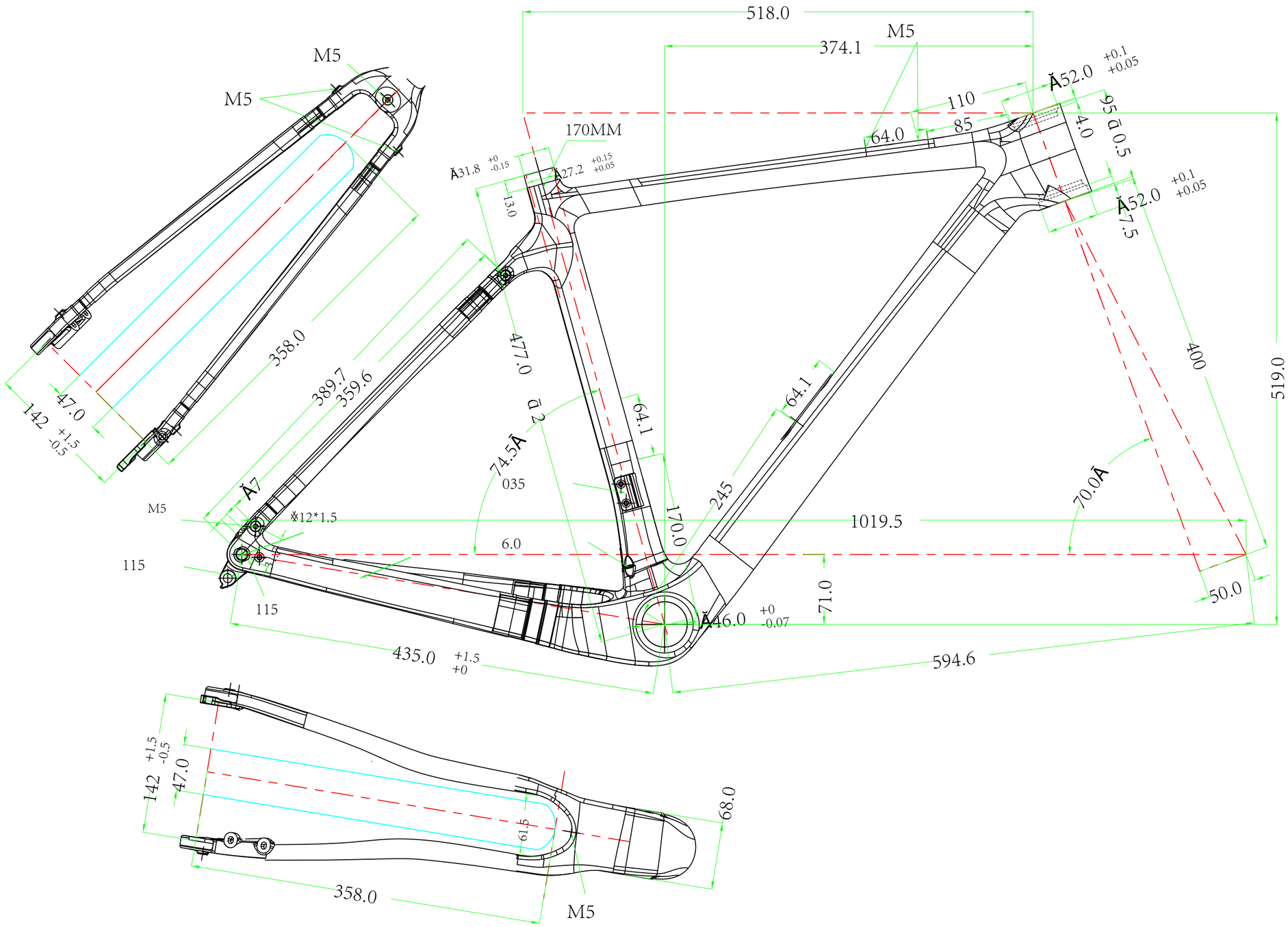

518.0
374.1
M5
M5
M5
170MM
110
85
64.0
Ă52.0
95 ā 0.5
4.0
Ă52.0
Ă31.8
Ă27.2
13.0
358.0
389.7
359.6
477.0
ā 2
64.1
64.1
400
519.0
142
47.0
74.5Ā
035
Ă7
M5
※12*1.5
6.0
170.0
245
1019.5
70.0Ā
115
115
71.0
50.0
Ă46.0
435.0
594.6
142
47.0
61.5
68.0
358.0
M5

NXT-G2-49