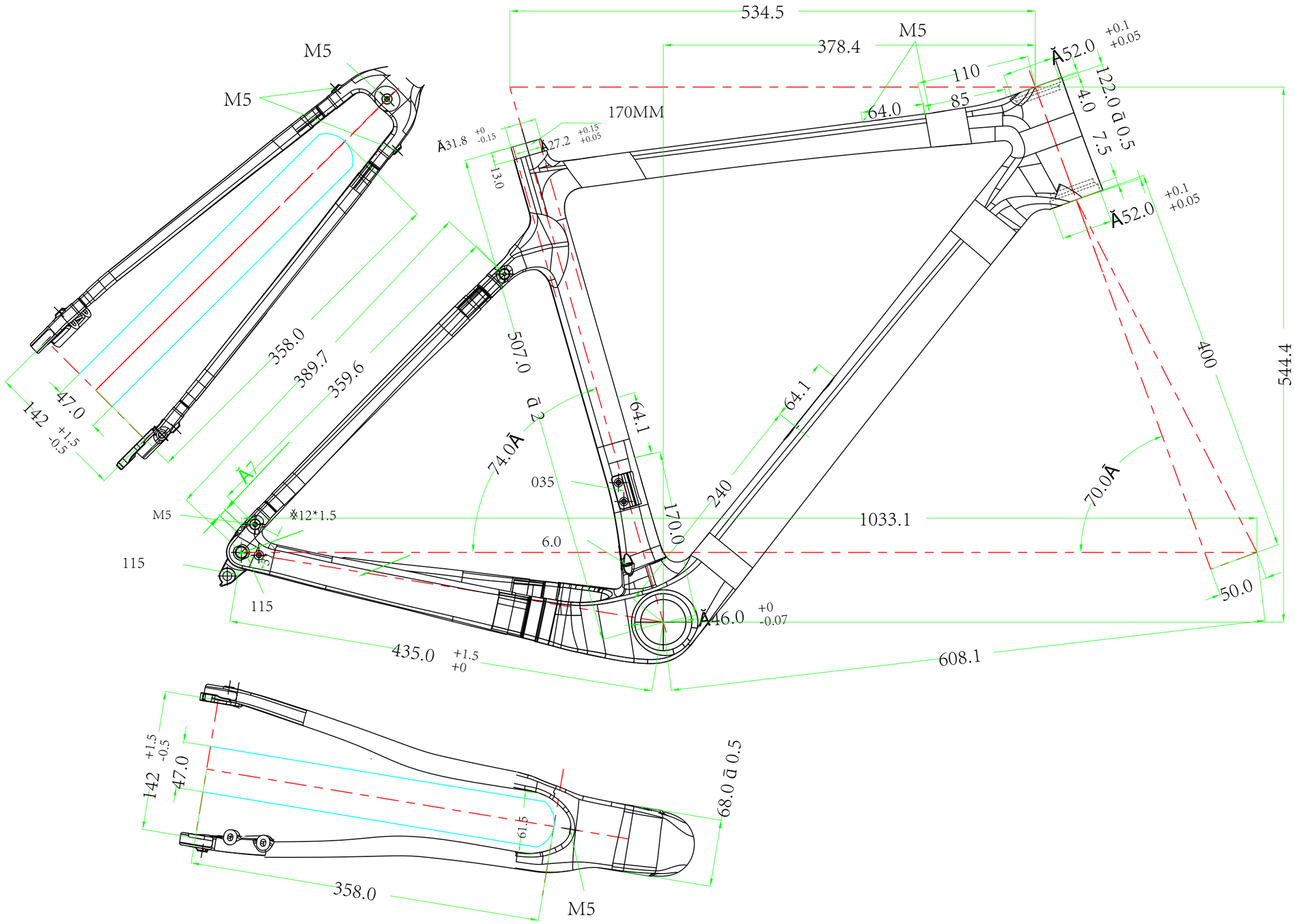

534.5
378.4
M5
M5
M5
170MM
110
85
64.0
Ă52.0
122.0 ā 0.5
4.0
7.5
Ă52.0
Ă31.8
Ă27.2
13.0
358.0
389.7
359.6
507.0
ā 2
74.0Ā
64.1
64.1
240
170.0
035
6.0
1033.1
70.0Ā
400
544.4
50.0
Ă46.0
608.1
435.0
M5
115
115
142
47.0
Ă7
12*1.5
142
47.0
61.5
68.0 ā 0.5
358.0
M5

NXT-G2-52